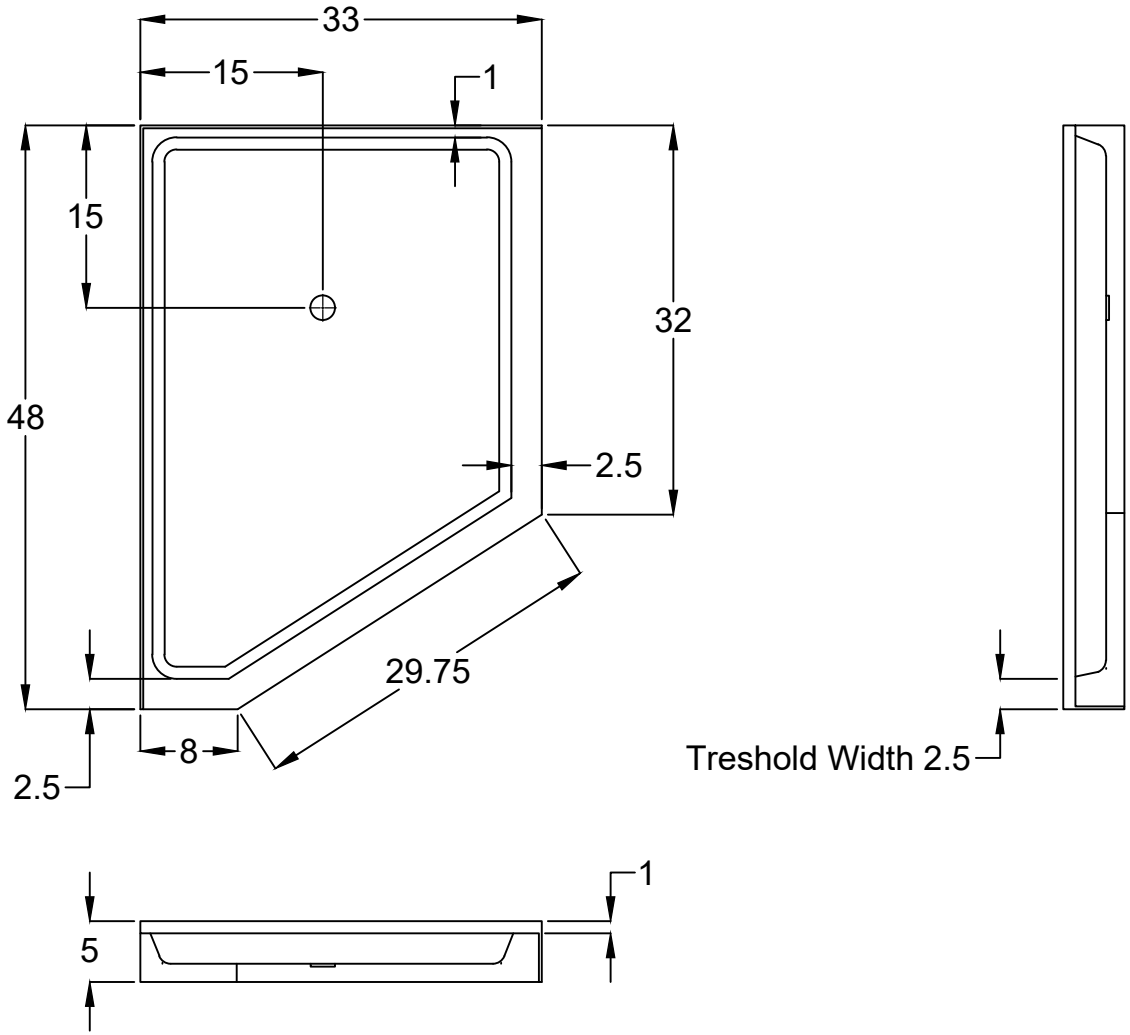

HYDRO SYSTEMS, INC.

29132 Avenue Paine, Valencia, CA 91355
661.775.0686, fax 661.775.0668, www.hydrosystem.com

Note: The information contained on this drawing is the sole property of Hydro Systems, Inc. Any reproduction in part or as a whole without the written permission of Hydro Systems, Inc. is prohibited.

Title:	HPN 4833		
Date:	July 21, 2020	Rev:	–
Scale:	None	Date:	
Material: Acrylic and Fiberglass, ¼" nominal thickness			